High Isolation Power Transformers

PA200xNL Basic and Operational Insulation

Pulse
a YAGEO company

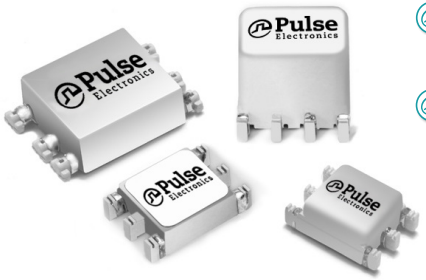

- *1500Vrms isolation (380Vrms continuous)*
- *Basic insulation (1.4mm creepage/clearance) and operational available*
- *Operating frequency: 50kHz and up*

Electrical Specifications @ 25°C - Operating Temperature -40°C to 130°C[5]								
Part[3,4] Number	Turns Ratio	Pri-Sec Isolation (VRMS)	MAX[1] V*µsec	Primary Inductance (µH MIN)	Leakage[2] Inductance (µH MAX)	DCR Primary (Ω MAX)	DCR Secondary (Ω MAX)	Package Size (L x W x H) (mm MAX)
OPERATIONAL INSULATION								
PA2001NL	1:1	1500	12	403	0.46	0.60	0.60	8.6 x 6.7 x 2.5
PA2002NL	1:1:1	1500	60	1800	0.60	1.60	1.60	9.0 x 8.6 x 7.6
PA2004NL	1:1:1	1500	20	437	0.85	0.85	0.85	8.6 x 6.7 x 3.6
BASIC INSULATION (1.4MM CREEPAGE AND CLEARANCE BETWEEN PRIMARY AND SECONDARY)								
PA2005NL	1:1:1	1500	26	840	0.75	1.05	1.05	11.8 x 8.8 x 4.0
PA2006NL	1:1	1500	26	864	0.75	0.82	0.82	11.8 x 8.8 x 4.0
PA2007NL	1:1	1500	53	1490	0.80	1.15	1.15	9.0 x 8.6 x 7.6
PA2008NL	2:1:1	1500	52	1425	0.80	1.15	0.575	9.0 x 8.6 x 7.6
PA2009NL	2.5:1:1	1500	47	1175	1.20	1.0	0.475	9.0 x 8.6 x 7.6

Notes:

1. The maximum volt-µsec limits the peak flux density to 2800 Gauss when used in a unipolar drive application. For bi-polar drive applications, a maximum volt-µsec of two times this rating is acceptable (i.e. 2* (volt*µsec rating) Volt*µsec = (voltage applied to the primary) * dutycycle / Frequency = V * alpha / Freq_ Hz = V * µsec
2. Leakage inductance is measured at primary terminals with all secondaries shorted.
3. Optional Tape & Reel packaging can be ordered by adding a "**T**" suffix to the part number (i.e. PA2002NL becomes PA2002NL**T**). Pulse complies to industry standard tape and reel specification EIA481.
4. The "NL" suffix indicates an RoHS-compliant part number.
5. The temperature of the component (ambient plus temperature rise) must be within the stated operating temperature range.
6. Continuous isolation voltage confirmed by 125°C/1000hrs accelerated aging with the bias voltage applied between primary and secondary windings.

PA2001NL

Mechanical

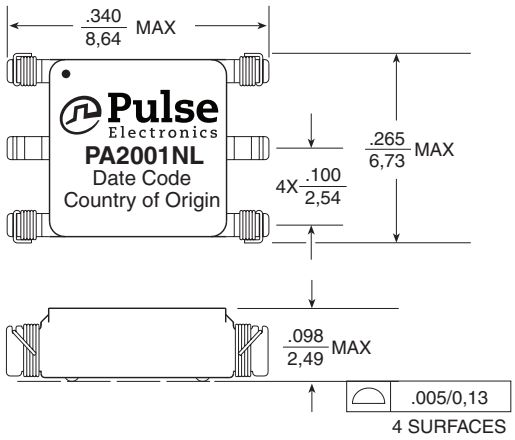

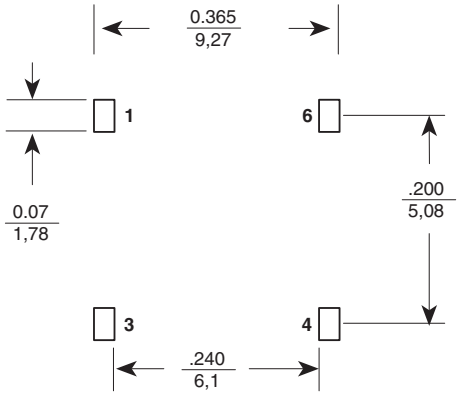

SUGGESTED PAD LAYOUT

Schematic

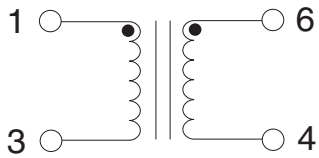

Weight .....0.28 grams
Tape & Reel 1500/reel
Tube 60/tube

Dimensions: Inches / mm

Unless otherwise specified, all tolerances are ± .010 / 0,25

PA2002NL

Mechanicals

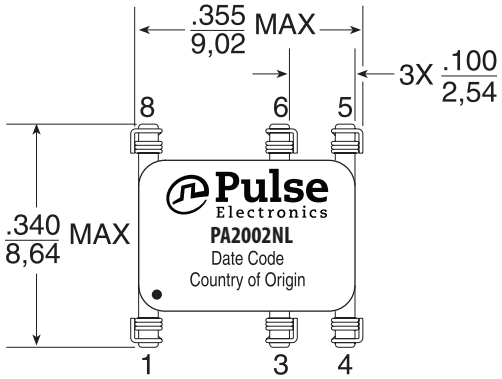

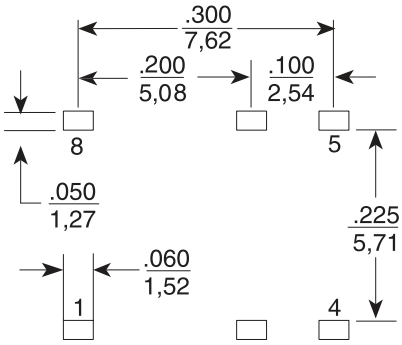

SUGGESTED PAD LAYOUT

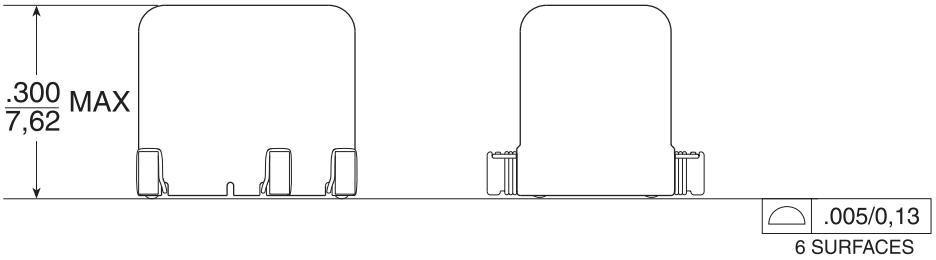

Schematics

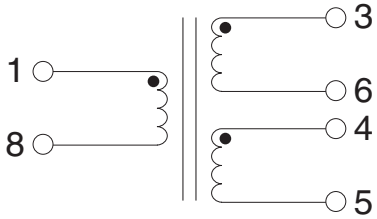

Weight .....0.60 grams
Tape & Reel 400/reel
Tube 50/tube

Dimensions:

Inches / mm

Unless otherwise specified, all tolerances are ± .010 / 0,25

PA2004NL

Mechanicals

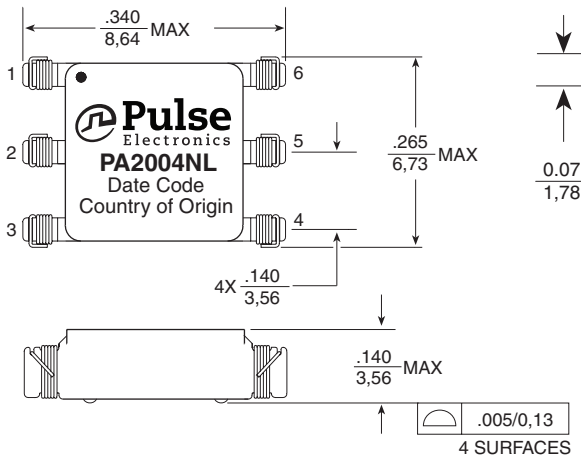

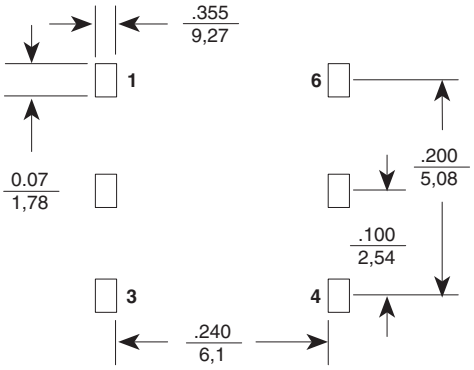

SUGGESTED PAD LAYOUT

Schematics

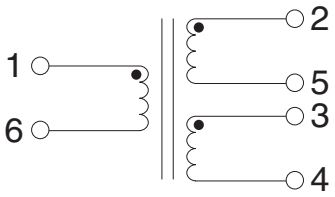

Weight .....0.23 grams
Tape & Reel 800/reel
Tube 75/tube

Dimensions: Inches / mm

Unless otherwise specified, all tolerances are $\pm \frac{.010}{0,25}$

PA2005NL, PA2006NL

Mechanical

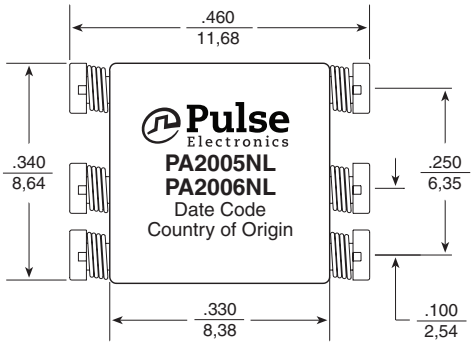

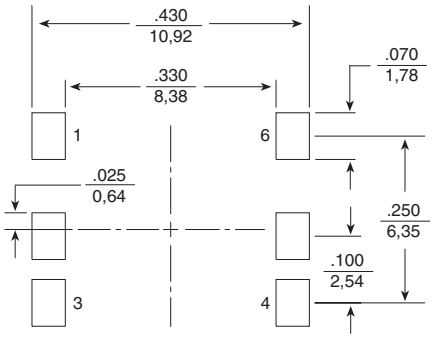

SUGGESTED PAD LAYOUT

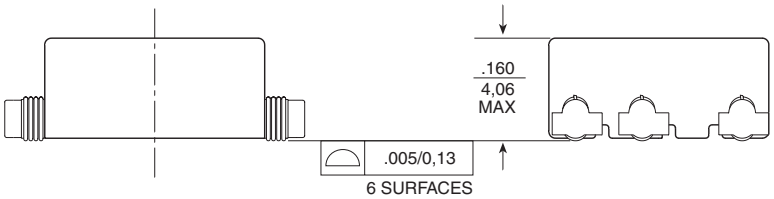

Schematic

PA2005NL

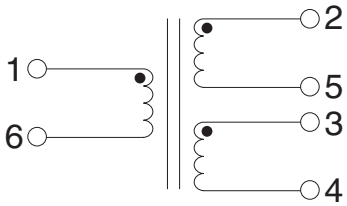

PA2006NL

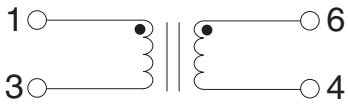

Weight .....0.48 grams
Tape & Reel 900/reel
Tube 60/tube

Dimensions: Inches / mm

Unless otherwise specified, all tolerances are $\pm \frac{.010}{0,25}$

High Isolation Power Transformers

PA200xNL Basic and Operational Insulation

Mechanicals

Schematics

PA2007NL, PA2008NL, PA2009NL

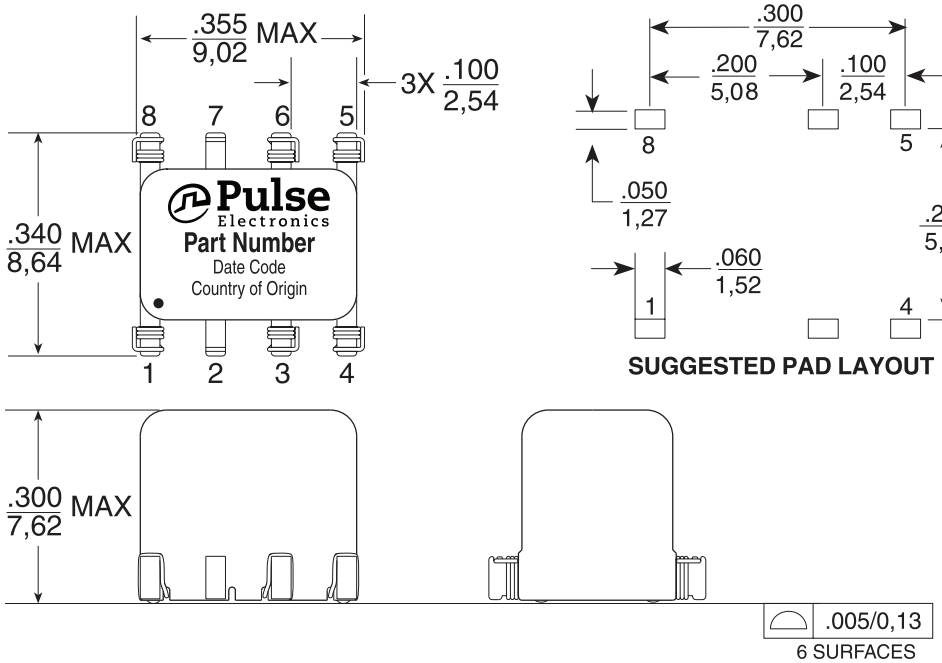

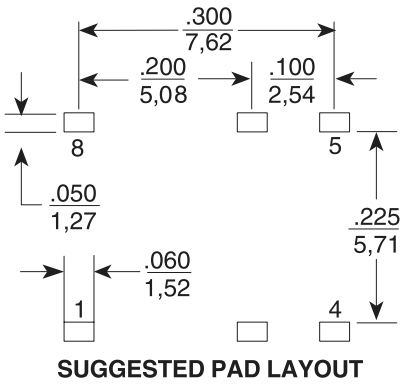

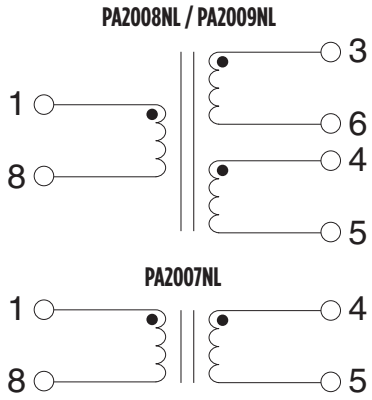

Weight .....0.60 grams
Tape & Reel 400/reel
Tube 50/tube

Dimensions: Inches / mm

Unless otherwise specified, all tolerances are $\pm \frac{.010}{0,25}$

* for PA2007NL the pads for pins 3 and 6 in the suggested pad layout should not be used in the layout

For More Information:

Americas - prodinfo_power_americas@yageo.com | **Europe -** prodinfo_power_emea@yageo.com | **Asia -** prodinfo_power_asia@yageo.com

Performance warranty of products offered on this data sheet is limited to the parameters specified. Data is subject to change without notice. Other brand and product names mentioned herein may be trademarks or registered trademarks of their respective owners. © Copyright, 2023. Pulse Electronics, Inc. All rights reserved.

YAGEO Corporation and its affiliates do not recommend the use of commercial or automotive grade products for high reliability applications or manned space flight.